WARNING TRUSS BOOM

Any piece of equipment can be dangerous if not operated properly. **YOU** are responsible for the safe operation of this equipment. The operator must carefully read and follow any warnings, safety signs and instructions provided with or located on the equipment. Do not remove, defeat, deface or render inoperable any of the safety devices or warnings on this equipment. If any safety devices or warnings have been removed, defeated, defaced or rendered inoperable, **DO NOT USE THIS EQUIPMENT!!!**

Maximum Properly Loaded Capacity 1,000 Pounds

Use Extreme Caution, this attachment drastically lowers the capacity and changes the handling characteristics of the forklift. <<Use the flip chart to the right of the steering wheel or the print out for the Genie GTH-844 in the instructions to determine the lifts capacities at different heights and reaches>>

Before you use this attachment, read, understand and obey all the safety rules and operating instructions in the Forklifts Operator's Manual

INTRODUCTION: SYMBOLS USED IN THESE OPERATING INSTRUCTIONS

Throughout these Operating Instructions (and on the attachment itself) there are universal safety symbols. They are commonly used in the equipment and attachment manufacturing industries. These symbols are meant to alert users to possible dangers when using the attachment. Please pay careful attention to any section of these Operating Instructions with one of these symbols.

Read Owner's Manual

General Warning Hazard/Alert

Do Not Put Hand In This Area

BEFORE INSTALLATION AND OPERATION:

Be sure to read this Operating Instructions and understand its contents prior to operation of the ARROW Boom. If there is anything in these instructions you do not understand, please contact your authorized dealer, or ARROW Customer Service Department at 800-821-7563. We will be glad to answer your questions.

ARROW Material Handling Products cares about your safety, and the safety of others who operate or are in the vicinity of the Boom attachment. ARROW takes great pride in engineering and building quality attachments with the operator's safety in mind, but the responsibility for the safe use of this attachment ultimately belongs to the operator.

Never let anyone operate the ARROW Boom attachment unless they have first read these Operating Instructions.

There are two portions of the OSHA code that pertain directly to booms.
They are:

- ***inspection of the Boom itself***
- ***inspection of the forklift used to lift the boom***

Now, look at the Daily Boom Inspection Criteria. These are the items that we require to be inspected EVERY shift before the lift is used. If it is not used that day, no inspection need be done.

A Daily Inspection Log must be completed daily before each shift.

RECOMMENDED OPERATING RULES FOR BOOMS

DO NOT OPERATE THIS EQUIPMENT UNTIL:

- The lift vehicle manufacturer has approved it to be used with booms.
- The owner/operator manual is read and thoroughly understood.
- ALL supplied safety restraints and safety pins are applied before use.
- You are familiar with all applicable government regulations.
- Your personnel are trained in these regulations and licensed where applicable.
- Your personnel are trained in the use of this equipment.

GENERAL OPERATING RULES:

- An inspection of the Boom must be made before EACH SHIFT (reference daily inspection criteria).
- The Boom must never be loaded beyond the manufacturer's specified load limits. This information may be found on applicable decals and/or identity plates located on the unit or on the sheet provided.
- Forklifts used to hoist the Boom must be fully OSHA compliant.
- The lift capacity established by the manufacturer of the industrial truck used to lift the Boom shall never be exceeded.
- The forklift operator must be properly licensed and trained in the use of the Boom.
- The forklift driver must remain at the controls of the forklift, with the engine running, at all times when the Boom is under load.
- When placing material into a wheeled vehicle, the receiving vehicle or trailer MUST be firmly chocked and all braking systems set.
- The wearing of hardhats and steel toed footwear is recommended by all personnel within the immediate area when the Boom is in use.
- Should there be the possibility of objects falling from the Boom, the manufacturer recommends the establishment of a Controlled Access Zone (CAZ) directly underneath the boom under load and extending outward ten (10) feet in all directions.

No modifications may be made to either the hoist vehicle and/or the Boom without the express written consent of the manufacturer after their review and written reply of approval by a registered Professional Engineer (P.E.).

Unauthorized (other) personnel are expressly forbidden from attaching the Boom and/or utilizing the forklift with the Boom affixed.

It is suggested that personnel using the Boom be required to read these operating instructions and sign the manufacturer's release before they are allowed to use the equipment. This signed release should be retained in their respective personnel files for the duration of their employment.

ELECTRICAL HAZARDS

Adequate clearance must be maintained between the Boom and any aerial electrical lines. All lines are to be considered energized unless they are Locked Out and Tagged Out by authorized personnel. The minimum standoff distance is recommended to be ten (10) feet. Note: More distance is required for HIGH VOLTAGE LINES! Check OSHA regulations for the proper distance.

COLLISION HAZARDS

When in use, adequate clearance between the Boom and physical objects must be maintained.
The use of at least one (1) trained spotter is highly recommended to assisting the safe transport of lifted loads.

ENVIRONMENTAL HAZARDS

The Boom shall not be used during periods of high winds or storms unless an authorized person has approved of such use.

DAILY BOOM INSPECTION CRITERIA

1. Visually inspect the Boom for physical damage, corrosion, bending, and freedom of extension (if so equipped), and overall cleanliness;
2. Check welds for cracking or breaks.
3. Check each lift mount hole for elongation or cracking.
4. Check safety chain for secure fastening, no damage, cracking, or elongation of links or hook.

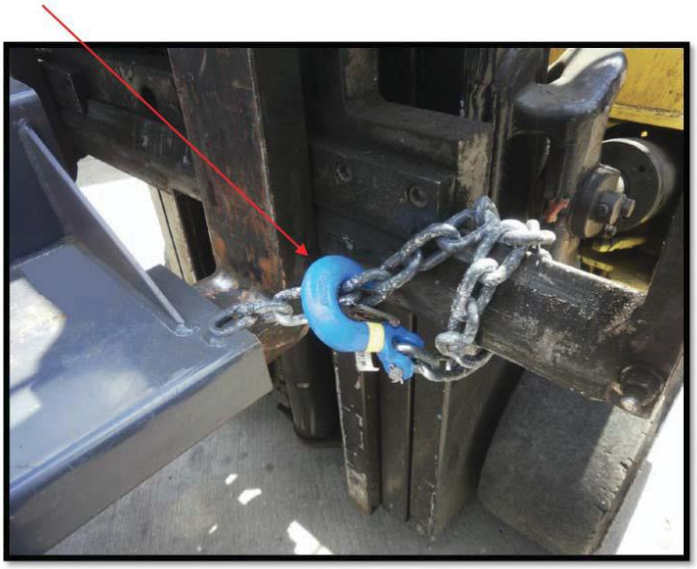

If the person receiving this handout will not be the user of the equipment, forward these instructions to the operator. If there is any doubt as to the operation or safety of the equipment, **DO NOT USE!!! CALL A TOOL SHED IMMEDIATELY!!!** **FAILURE TO FOLLOW THESE INSTRUCTIONS COULD RESULT IN INJURY OR DEATH**

GTH844 Load Chart
Serial No. GTH0813-16606 and following
for
Arrow Truss Boom 1000100-12-F

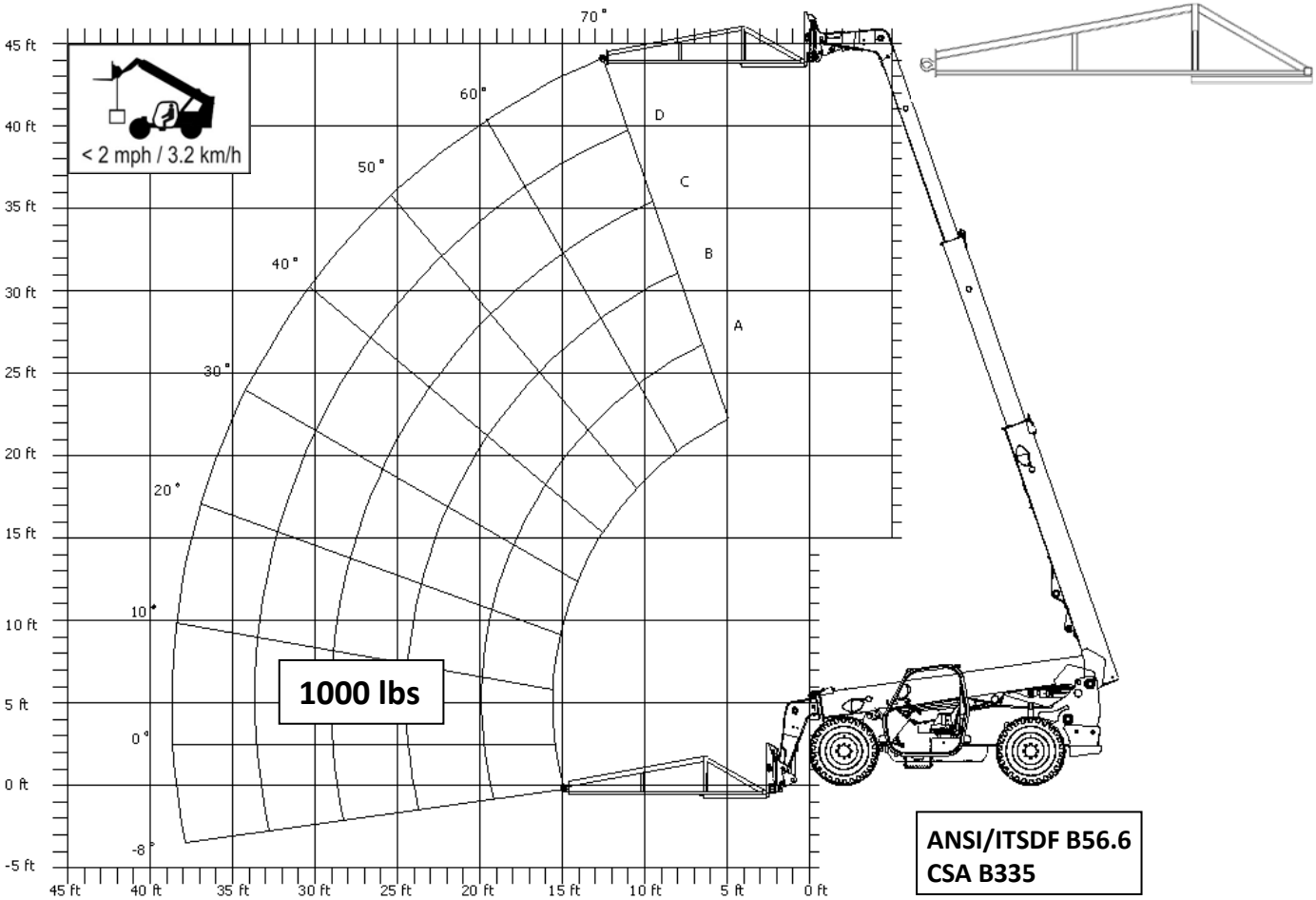

This inspection log must be filled out before the beginning of each work shift & must be kept on file at the jobsite.

BOOM INSPECTION LOG

Date	Pass	Fail (reference discrepancy by number)	Initial	Fix	Initial